Product Datasheet

STEELWAVE EDGE 50x15



Description

Industrial grade on metal RFID label optimized for metallic surfaces with industry leading printing compliancy.

Electrical specifications

Device type
UHF RFID / EPCglobal Gen2v2

Operational frequency
Global: 865 - 928 MHz

IC type
Impinj M830 with Gen2X
- 128 bits EPC memory, 0 bits User memory

EPC memory content
Unique number encoded in every label

Read range (2W ERP)*
On metal up to 4,5m / 15 ft

Applicable surface materials*
Optimized for metal

Attachment on curved surface
Label can be attached on a curved surface.
Check installation instructions for more details.

* Read ranges are theoretical values that are calculated for non-reflective environment. Different surface materials may have an effect on performance.

Environmental resistance

Operating temperature
-40˚C / -40˚F to +85˚C /+185 ˚F

Storage condition
1 year in +20˚C / 50% RH

Environmental values are the best recommendations; resistance against different conditions depends on the combination of all influencing factors, exposure duration and chemical concentrations. Thus, product's final suitability for certain environmental conditions is recommended to be tested.

Mechanical specifications

Label surface
Printable white PET, resin ribbon recommended.

Background adhesive
Indudstrial acrylic adhesive optimized for metal and painted metal surfaces.

Weight
0,5 g

Delivery format
800 pcs good labels on reel

Pitch on reel
20,32 mm / 0.8”

Reel core inner diameter
76 mm / 3”

Tag dimensions
50 x 15 x 1,3 mm / 1.97 x 0.59 x 0.05”

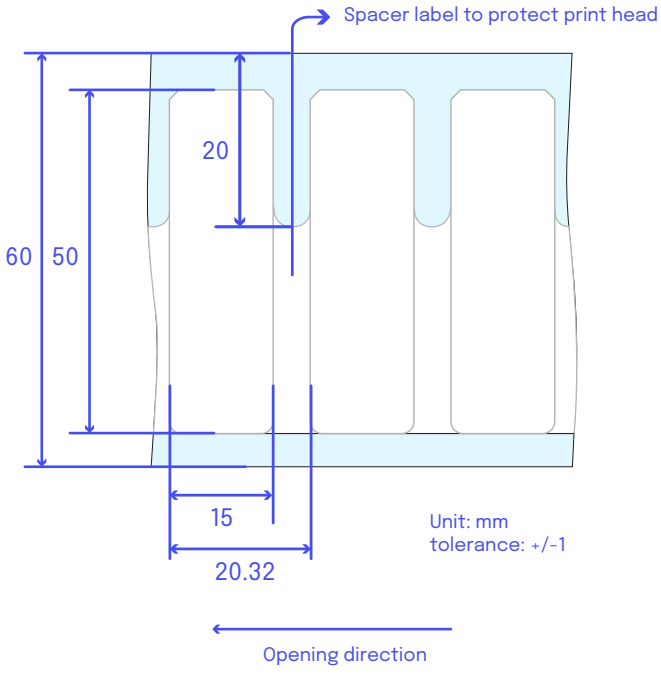

Product Datasheet

STEELWAVE EDGE 50x15

Installation instructions

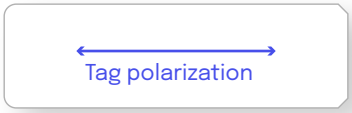

When attaching the label ensure the following

- Select a smooth surface without uneven vvareas below tag
- Avoid touching the background adhesive and IC location

When mounting the label with its adhesive, clean and dry the surface for obtaining the maximum bond strength. Typical cleaning solvents are heptane or acetone for oily surfaces or isopropyl alcohol for plastics. Do not use household cleaning solvents that contain oils. Carefully read and follow the manufacturer's precautions and directions for use when working with solvents.

Ideal application temperature is from +16˚C to +38˚C (+60˚F to +100˚F), bond strength can be improved with firm application pressure and moderate heating from +38˚C to +54˚C (+100˚F to +130˚F). Application at temperatures below 10˚C (50˚F) is not recommended. Final bond strength is achieved in 72 hours.

Optimal read range is achieved when label is attached close to the edge of metal asset, like shown in below picture.

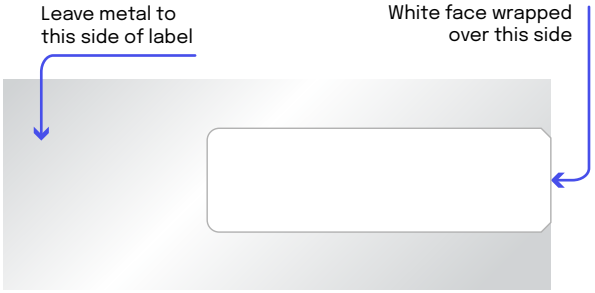

Minimum recommended bending diameter of the label is 100mm. For optimal performance please bend the label in the orientation shown below.



Personalization options

Pre-encoding
On request

Visual marking
B&W printing on request

Printer Compatibility

The Beontag Steelwave Edge labels are tested and verified to work with the following printers:

- Zebra ZT411 On Metal
- Zebra ZT410 Silverline
- Sato CL4NX
- Printronix Auto ID T6000e
- Printronix Auto ID T4000

For printing instructions please contact Beontag.

Order information

Product number: **3005981**
Product name: **Steelwave Edge 50x15 M830**

For additional information and technical support, please contact Beontag.

DISCLAIMER

THE MATERIALS, PRODUCTS AND SERVICES ARE SOLD SUBJECT TO ITS STANDARD CONDITIONS OF SALE, WHICH ARE INCLUDED IN THE APPLICABLE DISTRIBUTOR OR OTHER SALES AGREEMENT. ALTHOUGH ANY INFORMATION, RECOMMENDATIONS, OR ADVICE CONTAINED HEREIN IS GIVEN IN GOOD FAITH, BEONTAG AND ITS AFFILIATES MAKES NO WARRANTY OR GUARANTEE, EXPRESS OR IMPLIED, (I) THAT THE RESULTS DESCRIBED HEREIN WILL BE OBTAINED UNDER END-USE CONDITIONS, OR (ii) AS TO THE EFFECTIVENESS OR SAFETY OF ANY DESIGN INCORPORATING ITS PRODUCTS, MATERIALS, SERVICES, RECOMMENDATIONS OR ADVICE. EXCEPT AS PROVIDED IN BEONTAG STANDARD CONDITIONS OF SALE, BEONTAG AND ITS REPRESENTATIVES SHALL IN NO EVENT BE RESPONSIBLE FOR ANY LOSS RESULTING FROM ANY USE OF ITS MATERIALS, PRODUCTS OR SERVICES DESCRIBED HEREIN.

Each user bears full responsibility for making its own determination as to the suitability of Beontag products, materials, services, recommendations, or advice for its own particular use. Each user must identify and perform all tests and analyses necessary to assure that its finished systems incorporating Beontag products, materials, or services will be safe and suitable for use under end-use conditions. Nothing in this or any other document, nor any oral recommendation or advice, shall be deemed to alter, vary, supersede, or waive any provision of this Disclaimer, unless any such modification is specifically agreed to in a writing signed by Beontag.

About Beontag

From the science of graphic and label materials, RFID and wireless IoT enablers, we create solutions across the value chain to deliver digital transformation for businesses around the world.

Sustainability is at the core of what we do and we strongly believe that by substituting non-renewable materials and innovating through more sustainable and renewable products, we act as an ESG enabler for our customers' value chain.

Beontag is one of the world's leading providers of RFID and wireless IoT solutions, being present in more than 40 countries with 7 R&D centers and 2,000 employees, in constant development of technological and sustainable solutions designed to connect items, and gain efficiency and end-to-end traceability

CONTACT US FOR MORE INFORMATIONS:
beontag.com

The performance of the product should always be tested in the actual application conditions. Our recommendations are based on our most current knowledge and experience and the pictures and illustrations presented in this document are for illustration purposes only. As our products are used in conditions beyond our control, we cannot assume any liability for damage caused through their use. Beontag reserves the right to change its products and services at any time without notice.

©Beontag - www.beontag.com